World Organisation for Animal Health | Organisation mondiale de la santé animale | Organización Mundial de Sanidad Animal

https://doi.org/10.20506/rst.41.1.3304

Shipping augmentative biocontrol agents

E. Vila* (1), F. Wäckers (2) & J. Klapwijk (3)

(1) Research and Development Department, Agrobío S.L., Ctra. Nacional 340 km, 419 nº 81, La Mojonera (Almería), 04745, Spain

(2) Research and Development Department, Biobest Group, Ilse Velden 18, 2260 Westerlo, Belgium

(3) Koppert B.V., Veilingweg 14, Berkel en Rodenrijs, 2650 AD, the Netherlands

*Corresponding author: evila@agrobio.es

Summary

The majority of worldwide trading in live arthropods is done by specialised companies that produce and distribute beneficial insects, mites and nematodes for augmentative biological control of pests on crops. These beneficial arthropods, predators or parasitoids of crop pests and some nuisance species, which are harmless to humans, plants and other animals, are mass-reared, transported and released in the target environment as a viable alternative to chemical pesticides. As such, they play a major role in achieving a more sustainable and regenerative agriculture. Thousands of international air shipments are performed yearly by up to 30 major companies. Over the decades that this industry has been active, no significant transport problems have arisen. This is due to stringent standards that the industry has generated, including designated departments to deal with quality control and logistics, as well as guides for each species concerning packaging, storage and transport conditions. In addition, transporters always adhere to the regulatory standards of the importing and exporting countries, which is attested to by the documents included by the companies with each shipment. Two major issues arise when shipping live arthropods: first, the need to maintain stable environmental conditions within the shipping units (maintaining a cool chain) and, second, minimising transport time (preventing delays). This paper discusses the procedures implemented by the companies to assure quality, the documents required and provided currently, and the challenges to the safe transportation of beneficial organisms.

Keywords

Beneficial arthropods – Biological control – Packaging – Parasitoids – Predators – Transport.

Introduction

The majority of worldwide shipments of arthropods are done by specialised companies that produce and distribute beneficial insects, mites and nematodes for augmentative biological control of pests on agricultural crops. For decades, thousands of shipments of these beneficials have been made every year, without major incident. This is due to the existence of a highly professional industry, mainly composed of small and medium-sized enterprises, that has established qualified research and development departments, which continuously perform extensive studies to develop optimal transport and storage conditions for the different beneficial species. These arthropods are intended to be released mainly on agricultural crops (often in greenhouses) to safeguard the crops from pest damage [1]. In this article the authors discuss the relevance of augmentative biocontrol, the current status of how these arthropods are transported and traded, the potential risks/problems related to transport, and the future challenges. Only issues concerning the transport itself are discussed, because the import/export and release permits for biocontrol agents (BCAs) are already covered by regulations at the national level [2] and compliance with the regulations needs to be attested to by the documents included with each shipment.

Relevance of augmentative biocontrol

Global food production systems are facing the challenge of satisfying the demand for increased crop productivity while maintaining or increasing their environmental and economic sustainability [3]. The use of mass-reared natural enemies, predators and parasitoids of pests has been shown to be an effective and sustainable alternative to pesticide use from environmental and economic perspectives. Biological control re-establishes and enhances natural pest regulation mechanisms as they occur in natural ecosystems. As such, biological control is a main contributor to sustainable

agriculture, and it is a key element to achieving the ambitious goals of the European Green Deal [4].

The augmentative release of beneficial arthropods is applied in many areas of agriculture such as fruit and vegetable crops, cereals, maize, cotton, sugar cane, soya beans, grapes and many greenhouse crops [1]. It has allowed substantial reduction of chemical pesticide use. A good example is the published analysis of chemical pesticide residues on Spanish peppers upon import to Germany [5], both before and after the widespread implementation of augmentative biocontrol in 2006/2007. The excessive use of chemical pesticides and the resulting high levels of residues had caused a collapse in the export of peppers by 40% between 2004 and 2007. Following the implementation of augmentative biocontrol, a full recovery was achieved and since 2012 exports have increased by 200% [personal communication, 2021]. Nowadays, augmentative biocontrol is the main crop protection strategy in protected vegetable production, especially in Europe and North America [1].

Market for biological control agents

Since the 1960s, biological control through the augmentative release of predators or parasitoids has grown from a scientific activity to a reliable method of crop protection and a commercially viable alternative to pesticides. Years of fundamental and applied research, together with considerable investments by the private sector, have made this success story a reality. Currently, there are about 500 commercial producers of BCAs worldwide [1].

More than 170 species of invertebrate natural enemies are used in augmentative biological control in Europe [6]; the number increases to about 219 arthropod species when considering the worldwide scenario [7]. Of these, about 32 species are widely used in crop protection [2].

In 2015, the International Biocontrol Manufacturers Association (IBMA) estimated that between 2013 and 2015 there had been a global increase of around 10–20% in the total sales of biocontrol agents, with the market value of invertebrate natural enemies increasing to about € 155 million. Europe has the greatest market share of these invertebrates, with more than € 100 million in sales in 2015, further sales of about € 35 million in NAFTA (the North American Free Trade Agreement: USA, Canada and Mexico) and another € 20 million in other markets [8, personal communication, 2016].

Potential risks of trade in beneficial insects, mites and nematodes for biocontrol

Beneficial insects, mites and nematodes for augmentative biocontrol have been transported in increasing numbers for more than 50 years. Thousands of units (boxes, tubes, etc.) are shipped by air every year, while major incidents have never been reported (International Air Transport Association, personal communication, 2021). Moreover, these natural enemies of pests are considered to be safe/harmless for humans in normal use. For this reason, there are no specific protective measures required for their handling [9]. They are routinely handled by operators in the production facilities where they are mass-reared, as well as by growers and farm workers in the crops where they are released, without any associated problems.

The only minor exception would be the rare and usually limited problems described with the use of mites [10, 11], which are due to allergic reactions that can occasionally occur in a small percentage of people who are sensitive to dust mites. These are not different from other allergies produced by foods or fibres (for instance, some people are allergic to certain fabrics). Most, if not all, of these cases happen only when sensitive people are exposed for a prolonged time in conditions where the mites are active. For instance, cases have occurred after many days of handling mites directly while distributing them in the crop [12]. For most of these cases a simple dust-preventive mask and gloves suffice as protection. However, development of any allergic condition is very improbable during transport because of the packaging standards (see detailed procedures below).

There are very low environmental risks associated with these beneficials during transport because the packaging standards minimise the possibility of accidental releases. More importantly, any environmental risk associated with end use is already covered by regulations in the importing and exporting countries, because these beneficials are authorised to be released in crops by the national authorities both in the shipping country and at the destination. Conformity with these regulations is demonstrated by the permits and documents included with each shipment.

Many commercial BCAs are endemic in the markets in which they are sold, so they occur naturally in the environment. Exotic species are subject to extensive risk assessment, carried out with international participation, before import permits are provided [13]. A joint EPPO/IOBC (European and Mediterranean Plant Protection Organization/International Organisation for Biological Control) Panel on Biological Control Agents continues to evaluate potential environmental risks of exotic BCAs. Several international and regional organisations have produced documents, guidelines and codes of conduct relevant to the importation and release of BCAs. These include the publication of the Food and Agriculture Organization of the United Nations (FAO) Code of Conduct for import and release of exotic biological control agents in 1995, and an International Standard for Phytosanitary Measures (ISPM) in 1996, which was the

turning point for the activities related to the import and release of BCAs in Europe. The revised version of this ISPM has extended its range from classical biological control to inundative biological control, native natural enemies, microorganisms and other beneficial organisms, and also includes evaluation of environmental impacts [14].

Another initiative, to develop a harmonised regulatory system for its Country Members, was set up by the Organisation for Economic Co-operation and Development (OECD) [15]. More recently, during its presidency of the European Union (EU) Council in 2021, the Portuguese Government launched a discussion on the potential benefits of greater harmonisation of approaches to the use and release of invertebrate BCAs in the EU. This led the Council of the European Union requesting the Commission to submit a study on the situation of the introduction, production, evaluation, marketing and use of invertebrate BCAs within the territory of the Union [16].

Trading centralised by a professional industry

While hundreds of companies sell beneficial insects, mites and nematodes, fewer than 30 trade internationally. The complex logistical and regulatory requirements for shipping beneficial insects and mites deter smaller producers from long-distance transport. The bulk of the production of BCAs for augmentative release takes place in a centralised way. There are several reasons for this [2]:

- The high standards required, including efficient and reliable production and quality control systems for BCAs, are expensive to develop and maintain. Therefore, it is more economical to manage fewer large production sites than many small ones.
- The demand for certain products in a single country or region can fluctuate enormously and unpredictably from week to week, depending on crop calendars, pest pressure, climate conditions, etc. This makes forecasting of sales very difficult. In addition, production scale-up requires time (often months, depending on the life cycle of the species) and these living organisms have a very limited shelf-life, which makes it impossible to accommodate unpredictable variations in local market demand. It would take enormous overproduction (and waste) at each local production site to guarantee sufficient product and product quality throughout the season. Combining production for several regions or countries stabilises overall demand and significantly reduces the cost of biocontrol for farmers.
- Centralised production allows producers to offer a bigger portfolio, providing choice to customers worldwide, and allowing them to design the best possible biological control programme for their particular requirements.

Quality assurance

Given that fragile mites and insects can be easily affected by environmental conditions during packaging, storage and transport, thereby compromising their performance in the field, major companies have defined and implemented standard operational procedures (SOPs) to guarantee their quality [17]. Two major aspects are: a) the need to ensure that a cool chain is maintained during transport, to avoid mortality and/or quality loss, and b) arrival within a few days using the fastest possible route and avoiding delays. The range of optimal temperatures is species dependent. Insulating packaging, icepacks and refrigeration during transport are ways to maintain temperature and avoid detrimental heat build-up under relatively warm ambient conditions. Preventing loss of quality in colder ambient conditions is more complicated. The biggest challenge occurs when both cold and warm ambient conditions occur during the same shipment. Drastic changes of ambient temperatures can also cause severe problems such as condensation and clumping of material. Companies, as well as subsidiaries/distributors, use climate-controlled rooms not only during but also before and after transport. Rooms with intermediate temperatures are often used to cool or warm the products more gradually.

Relative humidity (RH) is a further key parameter, and each species is packaged within different substrates with specific RH, which needs to be adjusted according to the distance of the destination and the means of transport.

For some products, carbon dioxide (CO_2) is a third parameter that needs consideration in transport. The concentration of carbon dioxide, often correlated with the level of oxygen availability inside insulating boxes or in the transport vehicle, can reach levels harmful to the living beneficials, leading to reduced vitality of the populations or even mortality.

Monitoring the temperature in the insulating boxes and/or in the transport vehicle is generally performed with data loggers (Figure 1), and for some products loggers measuring RH and/or CO_2 are included as well.

The SOPs typically comprise, at a minimum, quality control (QC) measurements for three stages:

a) after production and before formulation and packaging
b) QC of the packaged products before shipment
c) at the subsidiary/distributor facilities after transport.

The QC guidelines for natural enemies compare their quality relative to long-term production standards as well as to wild populations of the same species [17]. These guidelines are a result of intensive cooperation between researchers and the BCA industry. Often the defined threshold values of the parameters examined by the producers (numbers per container, morphological and/or molecular identification,

fecundity, etc.) need to exceed the minimum requirements described by the IOBC [17].

Packaging

Beneficial insects, mites and nematodes are packed in multiple layers of packaging with well-closed inner containers or sachets. According to the species, different containers are used: plastic or cardboard bottles or tubes sealed with a ventilated cap, bulk bags (paper or plastic) and blisters. Some species of predatory mites are packaged in individual sachets, which are made from breathable paper or compostable foil. For transport, all these containers are placed inside polystyrene boxes, together with ice packs (frozen at least 24 hours in advance) and low-weight insulation and buffer materials (see Figure 1 for an example). The boxes are completely sealed, and sometimes placed inside an additional cardboard container. For certain species of mites, small openings are included for ventilation (Figure 1). The size and thickness of the polystyrene box, the number of product units, and the number and type of icepacks and buffer packs are adjusted according to the species, destination and means of transport.

All the products are labelled with unique codes for traceability to the batch of production and packaging, as well as with the name of the species, quantity of individuals, adequate range of temperatures for storage, pictograms advising how to handle and release the material, etc. The specific information provided on the label is often regulated by national authorities, and so may differ by destination.

Current transport situation and challenges

Shipments of beneficial insects, mites and nematodes for biocontrol are conducted in accordance with the regulations of both the exporting and importing countries. This always includes an invoice, packing list and air waybill, and usually also a veterinary and/or phytosanitary certificate. The exact certificates required are determined by the receiving country. Beneficial insects, mites and nematodes do not necessarily fit under the categories of animals or plants, for which these certificates have been developed. As a result, information is often requested that is not relevant/applicable for the invertebrates shipped, reflecting either a pragmatic extension of an existing requirement or a lack of knowledge about these beneficials. An example is that some importing European and Asian countries request sanitary certification in the form of a declaration from the exporting veterinary authorities that the populations to be shipped are free of a list of pests and diseases, most of which are specific for bees and irrelevant for other arthropods.

A major problem for the sector is the high price of air shipment of beneficials, which often is much higher than for

a)

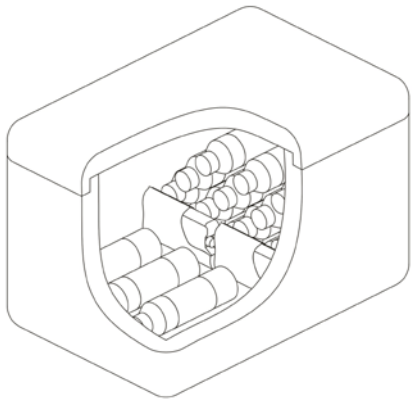

b)

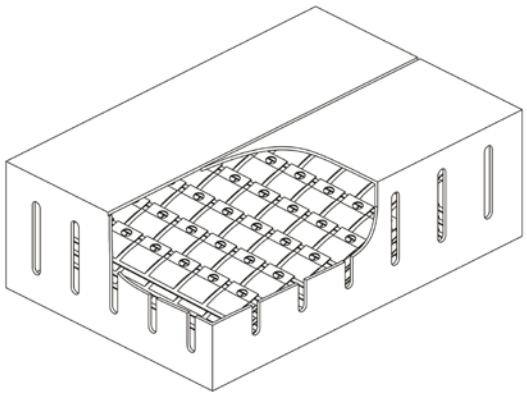

c)

Figure 1

Drawings showing the preparation of shipments of biocontrol agents

Shipping materials include (a) several plastic bottles surrounded by buffer materials and ice packs, placed inside a polystyrene box, and (b) sachets of mites inside a cardboard cage [9]. A picture (c) displaying the detail of the data logger placed on the lid is also shown

shipments of other materials. An additional challenge is finding courier companies, because most of them implement blanket rejections of all living animals in their transport rules; they do not differentiate between transporting tigers and beneficial arthropods [18, 19]. For instance, only the courier company MRW™ accepts the transport of living animals from Spain. For international shipments, specific transport service agreements have been developed between some of the major BCA companies producing high volumes of beneficial arthropods for augmentative biological control and specific courier companies, in order to obtain exemptions from the general exclusion of live animals from transport. A more differentiated assessment of risks associated with transporting different living organisms would be welcome.

A positive example of constructive collaboration includes the discussions between the International Air Transport Association (IATA) and IBMA in updating the Live Animals Regulations (LAR) [9]. Currently, the LAR of IATA include container requirements for beneficials, insects, bees and bumblebees (CR 61-68). This provides instructions and background information for exporters on how to pack some different types of insects and mites, as well as for airline and ground staff on how to handle insects and mites in transport. As of 2022, separate container requirements are provided for beneficial insects, mites and nematodes [9]. These container requirements can also be used by courier companies.

An additional problem that has been affecting transport in general, and the shipping of BCAs in particular, is the restrictions imposed by the COVID-19 pandemic. Limitation in flight availability has greatly compromised the transport of BCAs. However, the pandemic has highlighted more than ever the correlations between human health, environmental protection and economics, as well as the need to create/maintain good local agricultural production. It is in this framework that biological control plays a critical role by enabling a more regenerative form of agriculture.

Conclusions

Transport of BCAs from centralised production points is essential to the success of agricultural pest management across markets in many different countries. By ensuring the right transport conditions and minimising transport time, the transport sector has a vital role to play in contributing to the efficient production of safe and healthy food for the growing world population. Grower motivation, legal requirements and social demands in favour of food and ornamental plants produced with fewer or no pesticide residues will stimulate an increase in the worldwide trade of beneficial insects, mites and nematodes used in augmentative biological control.

Despite the often limited knowledge about these beneficial arthropods among the transport services, which may generate problems, many transport organisations have worked with the major biocontrol companies to arrange thousands of safe shipments internationally. However, rejection of shipments of beneficial mites and insects by courier companies under blanket bans on transporting live animals could compromise this success story. A better understanding of the contribution of these arthropods to the production of safe and healthy food, and their general innocuousness, would be desirable. For this purpose, any possible guidance for regulatory authorities would be welcome, as long as it is fit for purpose and does not generate irrelevant hurdles which could compromise the required transport and trading of these beneficials.

Acknowledgements

The authors are grateful for the valuable contributions by Lieve Wouters, María del Mar Serrano and Marina Mullor, from the logistics departments of their companies.

Expéditions d'agents utilisés pour la lutte biologique augmentative

E. Vila, F. Wäckers & J. Klapwijk

Résumé

L'essentiel du commerce mondial d'arthropodes vivants est réalisé par des entreprises spécialisées qui produisent et distribuent des insectes, des acariens et des nématodes utiles à des fins de lutte biologique augmentative contre les ravageurs des cultures. Ces arthropodes utiles agissent en tant que prédateurs ou parasitoïdes des espèces de ravageurs ou de nuisibles s'attaquant aux cultures, tout en étant inoffensifs pour l'homme, les végétaux et les autres animaux ; ils font l'objet d'un élevage de masse et sont transportés et relâchés dans l'environnement cible où ils constituent une alternative viable aux pesticides chimiques. À ce titre, ils jouent un rôle majeur en appui d'une agriculture

plus durable et régénératrice. Près de 30 grandes entreprises effectuent chaque année des milliers d'expéditions internationales par avion. Aucun incident significatif lié au transport n'a été constaté au cours des décennies d'existence de ce secteur d'activités. Cela est dû aux normes strictes mises en œuvre par le secteur, en particulier la mise en place de services chargés du contrôle de la qualité et de la logistique ainsi que l'élaboration de guides décrivant, pour chaque espèce, les exigences en matière de conditionnement, de stockage et de transport. En outre, les transporteurs se conforment toujours aux normes réglementaires des pays importateurs et exportateurs, comme l'attestent les documents d'accompagnement fournis par les entreprises lors de chaque expédition. Le transport d'arthropodes vivants présente deux difficultés majeures : d'une part, la nécessité de garantir la stabilité des conditions environnementales au sein des unités d'expédition (respect de la chaîne du froid) et, d'autre part, l'impératif de minimiser le temps de transport (prévention des retards). Les auteurs examinent les procédures mises en œuvre par les entreprises en termes d'assurance qualité, les documents actuellement requis et fournis ainsi que les défis posés à la sécurité des transports d'organismes utiles.

Mots-clés

Arthropodes utiles – Conditionnement – Lutte biologique – Parasitoïdes – Prédateurs – Transport.

Envío de agentes de control biológico aumentativo

E. Vila, F. Wäckers & J. Klapwijk

Resumen

El grueso del comercio mundial de artrópodos vivos está a cargo de empresas especializadas que producen y distribuyen insectos, ácaros y nemátodos beneficiosos que se destinan al control biológico aumentativo de plagas de los cultivos. Estos artrópodos beneficiosos, predadores o parasitoides de las plagas de los cultivos y otras especies dañinas, son a la vez inocuos para humanos, plantas y otros animales. Tras ser criados a gran escala y transportados, son liberados en el medio destinatario como alternativa viable a los plaguicidas químicos. Cumplen, en este sentido, una función capital para posibilitar una agricultura más sostenible y regeneradora. Cada año, hasta 30 grandes empresas efectúan miles de envíos internacionales por vía aérea. En los varios decenios que este sector lleva activo, nunca ha surgido ningún problema importante de transporte, gracias a las rigurosas normas implantadas por el sector, que incluyen departamentos dedicados específicamente a las cuestiones de logística y control de calidad y guías sobre las condiciones de embalaje, almacenamiento y transporte de cada especie. Además, los transportistas siempre se atienen a la normativa de los países importadores y exportadores, como atestigua la documentación con que las empresas acompañan cada envío. Al transportar remesas de artrópodos vivos hay dos grandes imperativos que plantean sendas dificultades: en primer lugar, el de mantener estables las condiciones del medio en las unidades de transporte (mantenimiento de la cadena del frío); y en segundo lugar, el de reducir al mínimo el tiempo de transporte (evitar demoras). Los autores examinan los procedimientos de garantía de calidad implantados por las empresas, los documentos requeridos y presentados actualmente y las dificultades que plantea el transporte seguro de organismos beneficiosos.

Palabras clave

Artrópodos beneficiosos – Control biológico – Embalaje – Parasitoides – Predadores – Transporte.

References

[1] Van Lenteren J.C., Bolckmans K., Köhl J., Ravensberg W.J. & Urbaneja A. (2018). – Biological control using invertebrates and microorganisms: plenty of new opportunities. *BioControl*, **63** (1), 39–59. https://doi.org/10.1007/s10526-017-9801-4

[2] Riudavets J., Moerman E. & Vila E. (2020). – Implementation of integrated pest and disease management in greenhouses: from research to the consumer. *In* Integrated Pest and Disease Management in Greenhouse Crops (M.L. Gullino, R. Albajes & P.C. Nicot, eds), Plant Pathology in the 21st Century, Vol. 9. Springer Nature, Cham, Switzerland, 457–485. https://doi.org/10.1007/978-3-030-22304-5_16

[3] Godfray H.C.J., Beddington J.R., Crute I.R., Haddad L., Lawrence D., Muir J.F., Pretty J., Robinson S., Thomas S.M. & Toulmin C. (2010). – Food security: the challenge of feeding 9 billion people. *Science*, **327** (5967), 812–818. https://doi.org/10.1126/science.1185383

[4] Hulot J.F. & Hiller N. (2021). – Exploring the benefits of biocontrol for sustainable agriculture – a literature review on biocontrol in light of the European Green Deal. Institute for European Environmental Policy, Brussels, Belgium, 37 pp. Available at: https://ieep.eu/uploads/articles/attachments/dd5ba87b-172b-44d2-ac39-782b17589b88/IEEP%20-%20Exploring%20the%20benefits%20of%20biocontrol%20for%20sustainable%20agriculture%20(2021).pdf?v=63791680901 (accessed on 28 October 2021).

[5] Chemisches und Veterinäruntersuchungsamt (CVUA) (2008). – Pesticide residue monitoring program shows impact: noticeably fewer residues in Spanish sweet peppers! CVUA, Stuttgart, Germany, 5 pp. Available at: http://cvuas.untersuchungsämter-bw.de/pdf/druck_pest_paprika5_EN.pdf (accessed on 28 October 2021).

[6] Cock M.J.W., van Lenteren J.C., Brodeur J., Barratt B.I.P., Bigler F., Bolckmans K., Cônsoli F.L., Haas F., Mason P.G. & Parra J.R.P. (2010). – Do new access and benefit sharing procedures under the Convention on Biological Diversity threaten the future of biological control? *BioControl*, **55**, 199–218. https://doi.org/10.1007/s10526-009-9234-9

[7] Van Lenteren J.C. (2012). – The state of commercial augmentative biological control: plenty of natural enemies, but a frustrating lack of uptake. *BioControl*, **57**, 1–20. https://doi.org/10.1007/s10526-011-9395-1

[8] Dunham W.C. (2015). – Evolution and future of biocontrol. *In* Proc. 10th Annual Biocontrol Industry Meeting (ABIM), 19–21 October, Basel, Switzerland, 23 pp. Available at: https://www.abim.ch/fileadmin/abim/documents/presentations2015/Keynote_Dunham_ABIM_2015.pdf (accessed on 2 March 2022).

[9] International Air Transport Association (IATA) (2022). – Live Animals Regulations (LAR): 2022, 48th Ed. IATA, Montreal, Canada, 543 pp.

[10] Danish Ministry of the Environment (2007). – Health effects of predatory beneficial mites and wasps in greenhouses. Danish Environmental Protection Agency, Pesticides Research, Report No. 110. Danish Ministry of the Environment, Copenhagen, Denmark, 129 pp. Available at: https://www2.mst.dk/udgiv/publications/2007/978-87-7052-513-8/pdf/978-87-7052-514-5.pdf (accessed on 24 January 2022).

[11] Suojalehto H., Hölttä P., Suomela S., Savinko T., Lindström I. & Suuronen K. (2021). – High prevalence of sensitization to mites and insects in greenhouses using biologic pest control. *J. Allergy Clin. Immunol. Pract.*, **9** (11), 4130–4137. https://doi.org/10.1016/j.jaip.2021.07.014

[12] Skousgaard S.G., Thisling T., Bindslev-Jensen C. & Baelum J. (2010). – Occupational asthma caused by the predatory beneficial mites *Amblyseius californicus* and *Amblyseius cucumeris*. *Occup. Environ. Med.*, **67** (4), 287. https://doi.org/10.1136/oem.2009.049403

[13] Bigler F., Babendreier D. & Kuhlmann U. (eds) (2006). – Environmental impact of invertebrates for biological control of arthropods: methods and risk assessment. CABI Publishing, Wallingford, United Kingdom, 288 pp. https://doi.org/10.1079/9780851990583.0000

[14] Food and Agriculture Organization of the United Nations (FAO) (2017). – Guidelines for the export, shipment, import and release of biological control agents and other beneficial organisms. International Standards for Phytosanitary Measures (ISPMs), ISPM No. 3. FAO, Rome, Italy, 16 pp. Available at: https://www.fao.org/3/j5365e/J5365E.pdf (accessed on 24 January 2022).

[15] Organisation for Economic Co-operation and Development (OECD) (2004). – Guidance for information requirements for regulation of invertebrates as biological control agents (IBCAs). OECD Environment, Health and Safety Publications, Series on Pesticides No. 21. OECD, Paris, France, 22 pp. Available at: https://www.oecd.org/env/ehs/pesticides-biocides/28725175.pdf (accessed on 24 January 2022).

[16] European Union (EU) (2021). – Council Decision (EU) 2021/1102 of 28 June 2021 requesting the Commission to submit a study on the Union's situation and options regarding the introduction, evaluation, production, marketing and use of invertebrate biological control agents within the territory of the Union and a proposal, if appropriate in view of the outcomes of the study. *Off. J. Eur. Union,* **L 238**, 81–83. Available at: http://data.europa.eu/eli/dec/2021/1102/oj (accessed on 9 February 2022).

[17] Van Lenteren J.C., Hale A., Klapwijk J.N., van Schelt J. & Steinberg S. (2003). – Guidelines for quality control of commercially produced natural enemies. *In* Quality control and production of biological control agents: theory and testing procedures (J.C. van Lenteren, ed.). CAB International, Wallingford, United Kingdom, 265–303. https://doi.org/10.1079/9780851996882.0265

[18] SEUR (2020). – Prohibited goods. SEUR [shipping company], Madrid, Spain. Available at: https://www.seur.com/en/private/send/prepare-your-package-for-shipping/prohibited-goods/ (accessed on 24 January 2022).

[19] FedEx (2022). – Global prohibited and restricted items. FedEx [shipping company], Memphis, United States of America. Available at: https://crossborder.fedex.com/us/assets/prohibited-restricted/ (accessed on 24 January 2022).

© 2022 Vila E., Wäckers F. & Klapwijk J.; licensee the World Organisation for Animal Health. This is an open access article distributed under the terms of the Creative Commons Attribution IGO License (https://creativecommons.org/licenses/by/3.0/igo/legalcode), which permits unrestricted use, distribution, and reproduction in any medium, provided the original work is properly cited. In any reproduction of this article there should not be any suggestion that WOAH or this article endorse any specific organisation, product or service. The use of the WOAH logo is not permitted. This notice should be preserved along with the article's original URL.